ERP POWER + LIGHT™

TWC Series

bianco™ ERP DRIVER INSIDE

AC Input Tunable White LED Modules with Casambi Wireless Control

CASAMBI

Input Voltage	Typical Source Lumens	Typical Input Power	Typical Efficacy (lm/W)	CCT Range	CRI	Dimming Method	Dimming Range
120 - 277 Vac	1500 lm (9.0 mm LES) 2000 lm (10.4 mm LES) 2500 lm (14.7 mm LES)	16.0 W 20.0 W 23.2 W	95 105 110	1800 - 6500 K	90+	Casambi	1 - 100%

Diameter: 50 mm (1.97 in)
Height: 19 mm (0.75 in)

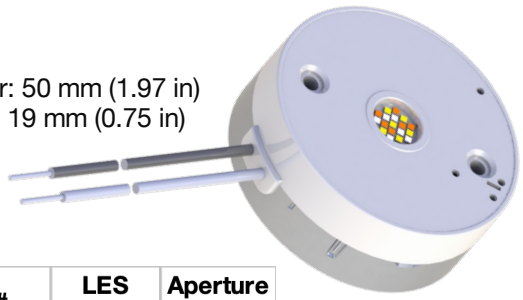

Model #	LES Size	Aperture Size
TWC-A5009W	9.0 mm	10 mm
TWC-A5012W	10.4 mm	12 mm
TWC-A5019W	14.7 mm	19 mm

KEY FEATURES

- Casambi Wireless control
- Integrated AC to DC driver electronics
- Zhaga compliant footprint
- 2 modes of operation: Tunable White, Warm Dim
- Designed for field replaceability with front heat sink mounting
- Meets UL8750 Safety-Related Electronics Circuits (SREC) requirements
- Approved for use as thermal cutout for fixture per UL1598
- Configurable maximum light output (40%, 60%, 80%, 100%)
- Configurable tunable CCT range: 1800 to 6500 K
- CA Title 24, IEEE 1789-2015, & Energy Star Compliant
- Compliant color consistency of < 3 step (2 step typical) MacAdam ellipse
- On board over-temperature protection (OTP) with thermal foldback
- Circadian rhythm lighting support with a controller

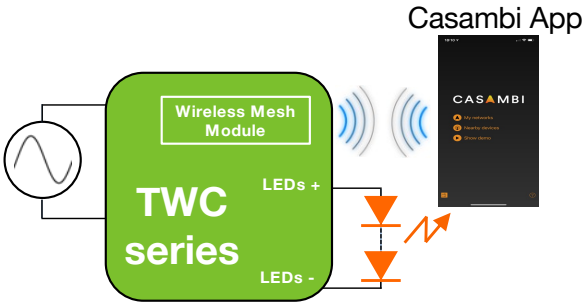

Application Diagram

CASAMBI WIRELESS CONTROL

- Compatible with Casambi ecosystem
- Wireless lighting controls with simple set-up that anyone can use
- Pre-integrated Bluetooth mesh module enables brands to create multi-way controls and switching without additional wiring; no central gateway required
- Secure, reliable mobile app & software
- Dimming, grouping, many users, schedules, timers
- Virtually unlimited range with mesh

Download on the App Store · GET IT ON Google Play

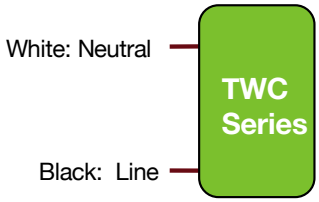

Wiring Diagram

APPLICATIONS

- Accent lighting
- Architectural lighting
- Track lighting

CERTIFICATIONS

Zhaga · cULus · FC · Pb lead-free · CA Title 24 · RoHS · 5 Year Warranty

© ERP Power, LLC

AC Input Tunable White LED Modules with Casambi Wireless Control

CASAMBI

1 - ORDERING INFORMATION

1.1 TWC - Base Part Numbers

Part Number	Light Emitting Surface (LES) (mm)	Aperture Size (mm)	Typical Input Power (W)	Typical Source Lumens (lm)	Typical Efficacy (lm/W)	Notes
TWC-A5009W-15-9-CNS	9	10	16.0	1500	94	Side Leads
TWC-A5012W-20-9-CNS	10.4	12	20.0	2000	100	Side Leads
TWC-A5019W-25-9-CNS	14.7	19	23.2	2500	108	Side Leads

1.2 TWC - Secondary Optic Compatibility Lens Adaptor (to be ordered separately)

Part Number	Lens Adapter		
	LADA-BIA50-19-TIRA	LADA-BIA50-12-TIRA	LADA-BIA50-09-TIRA
Description	Optics adapter for LEDR, 19 mm aperture	Optics adapter for LEDR, 12 mm aperture	Optics adapter for LEDR, 9 mm aperture
TWC-A5019W		X	X
TWC-A5012W			X
TWC-A5009W			

1.3 TWC - Secondary Optic Compatibility Lens (to be ordered separately)

Part Number	Lens	
	LEDR-BIA50-MN5024-50	LEDR-BIA50-MN5024-24
Description	50 mm outer diameter, 24 mm aperture TIR lens, 50° beam angle	50 mm outer diameter, 24 mm aperture TIR lens, 24° beam angle
TWC-A5019W		X
TWC-A5012W	X	
TWC-A5009W	X	

AC Input Tunable White LED Modules with Casambi Wireless Control

CASAMBI

1 - ORDERING INFORMATION

1.4 Programming Tools (to be ordered separately)

Description	Part Number
Programming Cradle for 50 mm Diameter Light Engines, Requires PROG-JACK-USB for Connecting to Computer	PROG-BIA50-CRADLE
Programming Cable, USB to 3.5 mm Audio Jack PROG-JACK-USB	PROG-JACK-USB

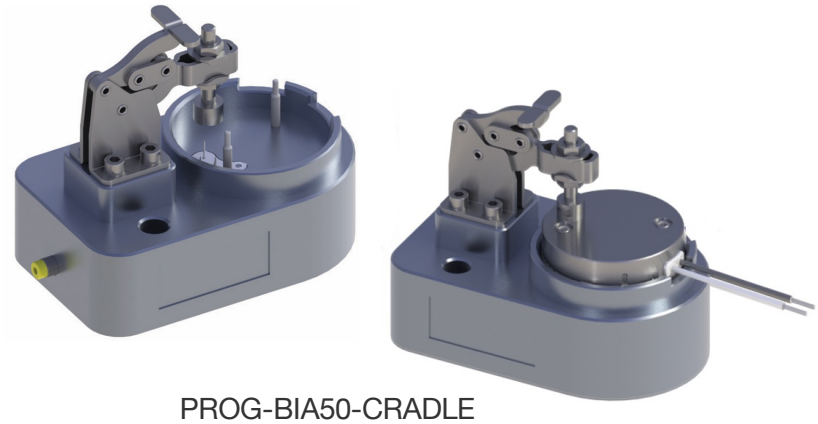

PROG-BIA50-CRADLE



PROG-JACK-USB

1.5 TWC - Thermal Pad (to be ordered separately)

Description	Part Number
Thermal Pad, 1 mm thick, 8 W/mK	TPAD-BIA50

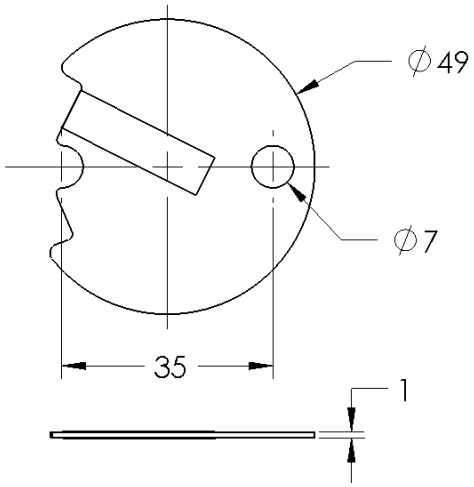

AC Input Tunable White LED Modules with Casambi Wireless Control

CASAMBI

2 – OPERATIONAL SPECIFICATIONS

2.1 Electrical Specifications (@ 25 °C Ambient Temperature)

Specification	Units	Minimum	Typical	Maximum	Notes
Input Voltage Range	Vac	90	120, 277	305	-
Input Frequency Range	Hz	47	50/60	63	
Input Current	mA	-	-	230 mA @ 120 Vac 100 mA @ 277 Vac	
Power Factor		0.9	> 0.9		At nominal input voltage and 100% output
Total Harmonic Distortion (THD)	%	-	-	20%	At nominal input voltage, and from 100% to 40% of rated lumen output
Inrush Current	A	Meets NEMA-410 requirements			At any point on the sine wave and 25°C
Leakage Current	mA	-	-	0.32 mA @ 120 Vac 0.75 mA @ 277 Vac	Measured per IEC60950-1
Start Time	ms	-	≤300	500	-

AC Input Tunable White LED Modules with Casambi Wireless Control

CASAMBI

2 – OPERATIONAL SPECIFICATIONS (CONTINUED)

2.2 Photometric Specifications (@ 60°C Substrate Temperature, Ts)

Specification	Range	Notes
Lumens	≤ 1500, 2000, 2500 lm	Listed light output and efficacy refers to light output from the source. Diffuser lenses and additional optics will affect final light output and efficacy. See section 2.3 for characterization charts.
Efficacy	105 lm/W	
CCT	1800–6500K	
CCT (Warm Dim Range)	3050–1800 K (MR16 Halogen profile) 2700–1800 K (Incandescent profile)	Warm Dim profile selectable via Casambi app.
CRI (Ra)	90+	2700–6000 K
CRI (R9)	50+	2700–6000 K
Nominal Color Consistency (Duv)	± 0.0033	< 3 step MacAdam ellipse (SDCM) at 100% output (2 step typical).
Lumen Maintenance	L70 (70% of initial lumens) at 50,000 hours at Tc ≤ 75°C.	
Flicker	Compliant with IEEE 1789-2015.	

AC Input Tunable White LED Modules with Casambi Wireless Control

CASAMBI

2 - OPERATIONAL SPECIFICATIONS (CONTINUED)

2.3 - Lumen and Color Performance Data

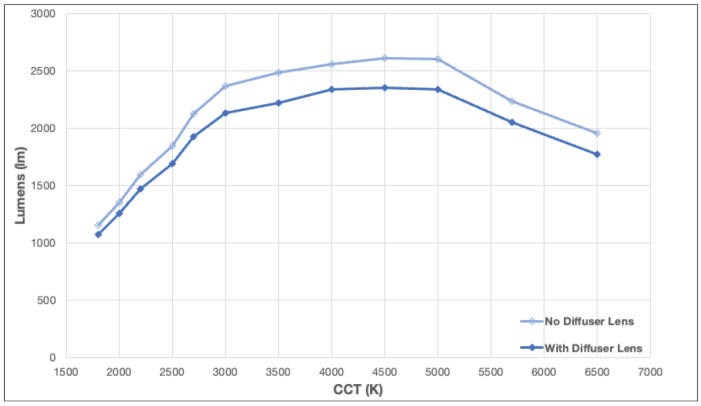

Typ. Lumen Output at Various CCT Points

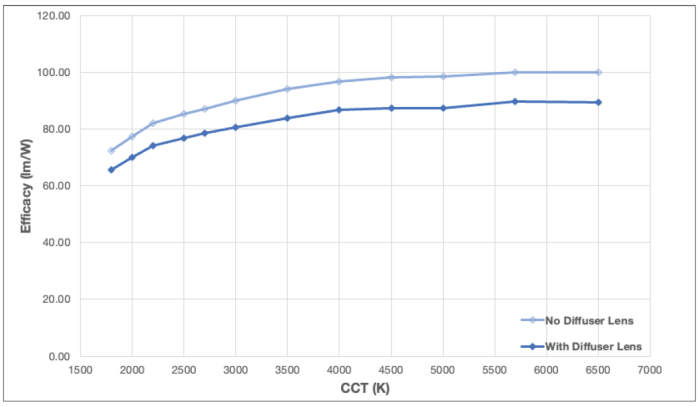

Typ. Efficacy at Various CCT Points

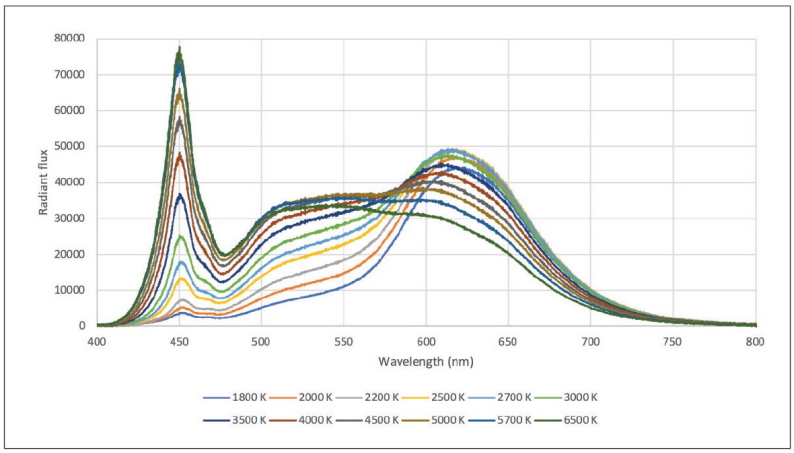

Spectral Power Data (SPD) at Various CCT Settings

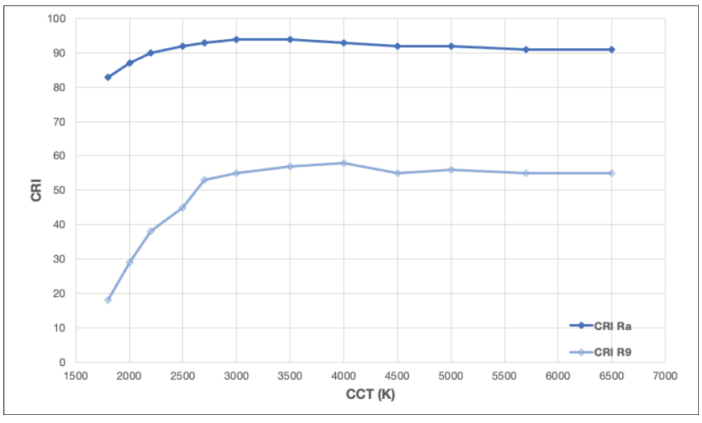

CRI (Ra and R9) at Various CCT Points

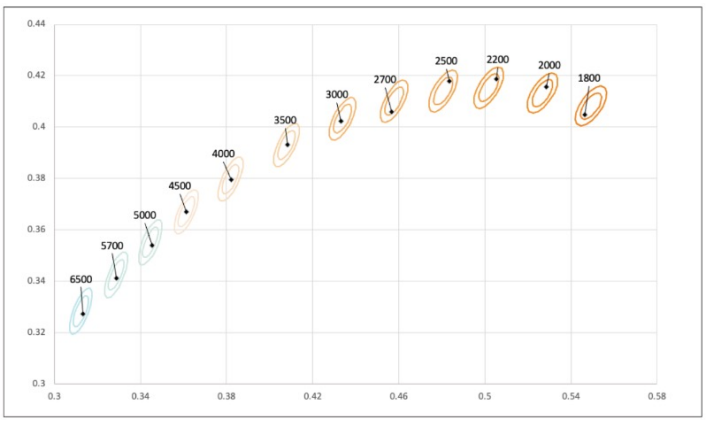

12 Selectable CCT Points in the CIE 1931 Color Space

AC Input Tunable White LED Modules with Casambi Wireless Control

CASAMBI

2 – OPERATIONAL SPECIFICATIONS (CONTINUED)

2.4 Environmental and Safety Specifications

Specification	Units	Minimum	Maximum	Notes
Operating Ambient Temperature (Ta)	°C	-20	40	-
Maximum Case Temperature (Tc)	°C	-	90	
Maximum Substrate Temperature (Ts)	°C	-	95	
Storage Temperature	°C	-40	85	
Humidity	%	5	95	Non-condensing.
Acoustic Noise	dBA	-	24	Measured at a distance of 1 foot (30 cm)

Specification	Notes
Mechanical Shock Protection	As per EN60068-2-27.
Vibration Protection	As per EN60068-2-6 & EN60068-2-64.
MTBF	> 200,000 hours when operated at nominal input conditions, and at Tc < 90°C.
Driver Lifetime	50,000 hours at Tc = 90°C maximum case hot spot temperature.
Conducted & Radiated EMI	Compliant with FCC CFR Title 47 Part 15 Class B at 120 Vac, Class A at 277 Vac.

Specification	Type	Standard	Notes
Immunity Compliance	ESD (Electostatic Discharge)	IEC 61000-4-2	6 kV contact discharge, 8 kV air discharge, level 3.
	Electrical Fast Transient	IEC 61000-4-4	2 kV on AC power port for 1 minute, 1 kV on signal/control lines.
	Surge	IEC 61000-4-5	2 kV line to line (differential mode) / 2 kV line to common mode ground.
		ANSI/IEEE c62.41.1-2002 & c62.41.2-2002 category A, 2.5 kV ring wave.	
	High Pot or Dielectric Voltage Withstand	2200 Vdc	Tested between 0–10 V leads and AC input.

Safety Agency	Notes
UL	UL recognized component. Safety-Related Electronic Circuit (SREC) rated
NEMA	SSL-1-2016
CA Title 24	Compliant
ENERGY STAR ®	Compliant

AC Input Tunable White LED Modules with Casambi Wireless Control

CASAMBI

3 – MECHANICAL SPECIFICATIONS

Specification	Notes	
Dimensions	**Diameter:**	50 mm (nominal 1.97 in)
	Height:	19 mm (nominal 0.75 in)
Light Emitting Surface (LES)	TWC-A5009W-15-9-CNS: 9 mm TWC-A5012W-20-9-CNS: 10.4 mm TWC-A5019W-25-9-CNS: 14.7 mm	
TWC Weight	71 g (2.5 oz)	
Heat Sink Attachment	Front-mount, Small Fillister Head, M3 x 30 x 0.5 mm (ISO) #3-48 x 1 in (UNC/UNF), Type A, Ni GBT13806.1 Recommended torque: 0.59-0.79 N*m (5.2-6.9 lb*in)	

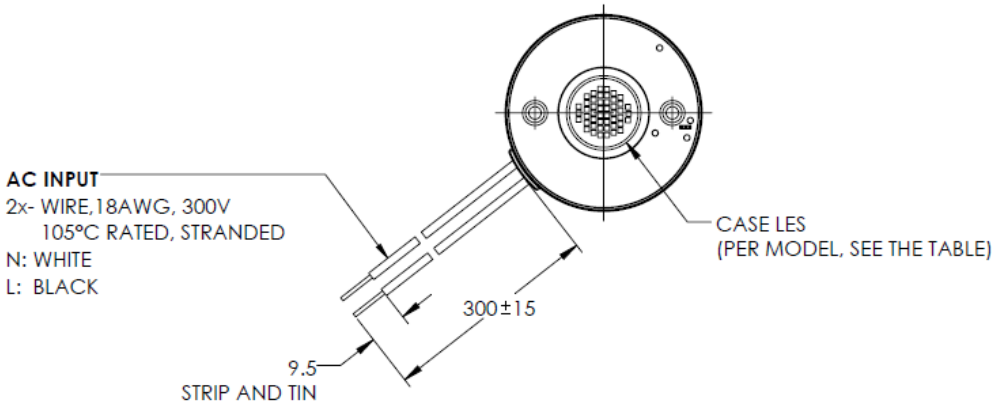

Model #	LES Size	Aperture Size
TWC-A5009W	9 mm	10 mm
TWC-A5012W	10.4 mm	12 mm
TWC-A5019W	14.7 mm	19 mm

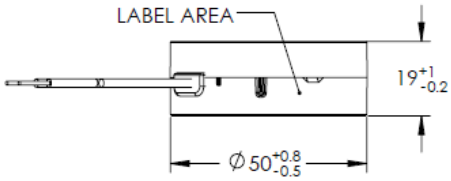

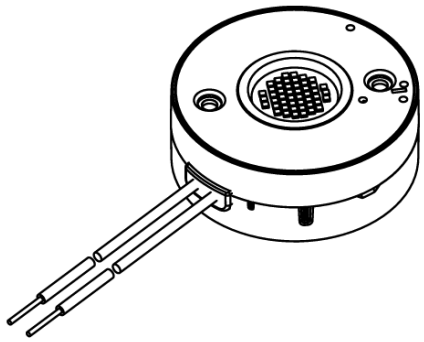

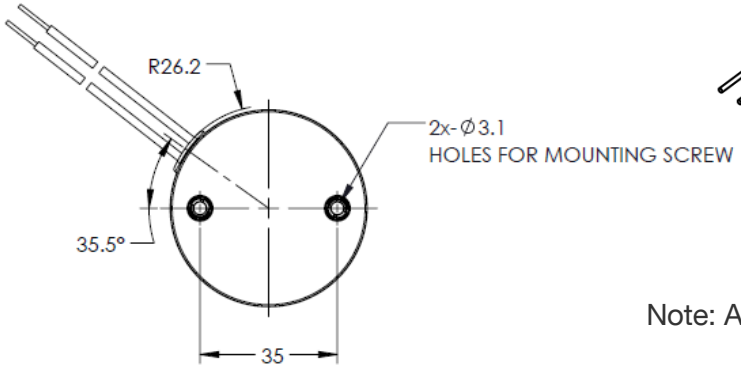

Note: All dimensions are in millimeters.

AC Input Tunable White LED Modules with Casambi Wireless Control

CASAMBI

4 – LIFETIME AND HEAT SINKING RECOMMENDATIONS

In most applications, a heat sink that would be used to cool the COB the TWC replaces will be sufficient to cool the engine. However, with color products, the LPW is significantly lower than static white products. For example, a heatsink being used to cool a white COB with an LPW of 150+ will not sufficiently cool a color product at the same lumens. Color applications tend to achieve an efficacy of 80-100 LPW.

The TWC is tested on standard heatsinks with known thermal resistance, using three sizes shown below. These heatsinks offer a starting point as to how large a heatsink needs to be to support a given Lumen output.

To verify this, once mounted to the planned heatsink, thermocouple the Tc point on the base of the engine. A target temperature of less than Tc 70°C at the max ambient temperature for the application indicates sufficient heat sinking.

If the measured temperature is above this, the heatsink will need to be changed. The TWC will fold back lumens if the LED array temperature exceeds 85°C which will happen at approximately Tc = 70°C.

A thermal conductive material of greater than 8W/m*K is recommended for mounting the engine to the heatsink.

Manufacturer	Mechatronix	Mechatronix	Mechatronix
Model	GH36D 9980-B	LPF67A68-8-B	LPF70A50-5-B
		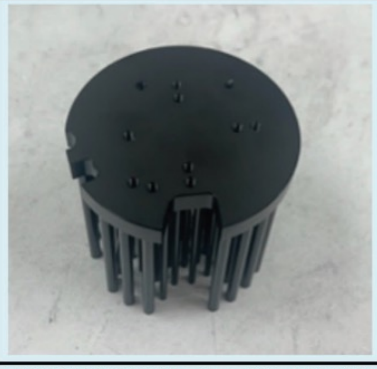	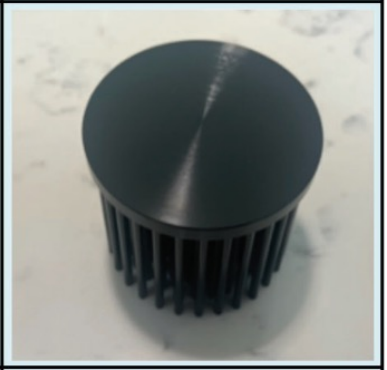
	GH36D 9980-B, 120 Vac, Rev. X04, 4000K CCT	LPF67A68-8-B, 120 Vac, Rev. X04, 4000K CCT	LPF70A50-5-B, 120 Vac, Rev. X04, 4000K CCT
Light Engine Output (Lumen)	Ts at Ta of 40 °C	Ts at Ta of 40 °C	Ts at Ta of 40 °C
850			
1000			69.1
1250			74.5
1500		72.8	79.9
2000		82.5	91.5
2500 (Max)	64.9	85.3	97.4

AC Input Tunable White LED Modules with Casambi Wireless Control

4 – PREDICTED LIFETIME AND HEAT SINKING RECOMMENDATIONS (CONTINUED)

In most applications, the existing LED array heat sink normally be reused for the new light engine, provided the temperature confirms adequate cooling. To verify adequate thermal performance, measure the t_c point at the base of the TWC light engine using a thermocouple. At the maximum expected ambient temperature, the t_c temperature should remain below 80°C. If the measured temperature exceeds 80°C, the heat sink should be increased. The TWC will automatically reduce the lumen or the light output if the LED substrate temperature exceeds 95°C.

The expected lifetime is determined by measuring the temperature of the electrolytic capacitors whose failure could affect light output. These measurements are taken while the LED operates at its nominal load and under the worst-case AC line voltage. The graphs in the figures here below are determined by the electrolytic capacitor with the shortest lifetime, among all electrolytic capacitors. It represents a worst-case scenario in which the TWC is powered 24 hours/day, 7 days/week with no baseplate. The lifetime of an electrolytic capacitor is measured when any of the following changes in performance are observed:

1) Capacitance changes more than 20% of initial value
2) Dissipation Factor (tan δ): 150% or less of initial specified value
3) Equivalent Series Resistance (ESR): 150% or less of initial specified value
4) Leakage current: less of initial specified value

For heat sink mounting, a thermal gap pad material with a thermal conductivity greater than 8 W/m·K is recommended. Thermal grease can also be used as an alternative. Thermal grease shall have a thermal conductivity higher than 8 W/m.K and suitable for the operating temperature range. The thermal grease shall provide low thermal resistance and maintain stable thermal performance under long operation.

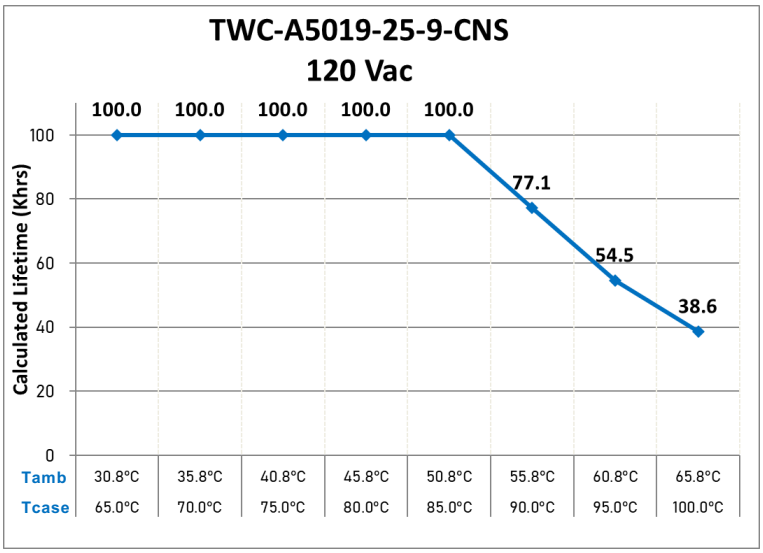

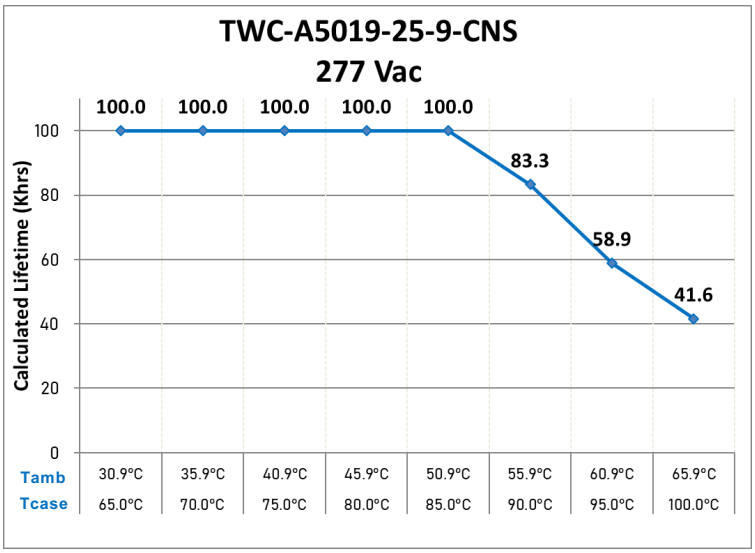

AC Input Tunable White LED Modules with Casambi Wireless Control

4 – PREDICTED LIFETIME AND HEAT SINKING RECOMMENDATIONS (CONTINUED)

The thermal management characteristics of the heat sink used with the TWC should be validated by measuring its case temperature (Tc). This test should be done with the TWC installed in the fixture at ambient temperature and air flow conditions similar to the end-use installation. It is recommended that the thermal management system be designed for a Tc < 75 °C.

TWC has on-board over temperature protection (OTP) which will throttle the currents to the LED arrays. The CCT at which the unit is operating will be maintained in this mode, but the output lumens will drop. This ensures that the LEDs are not subjected to abnormal temperatures.

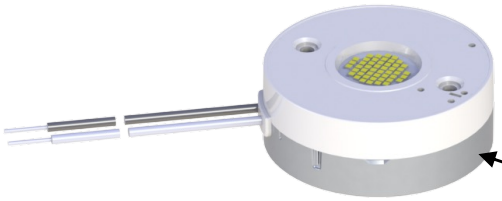

Case Temperature (Tc) Measurement Point
Recommended: Tc<75°C

AC Input Tunable White LED Modules with Casambi Wireless Control

CASAMBI

5 – CASAMBI DIMMING WIRELESS CONTROL

TWC is compatible with Casambi wireless lighting control. Casambi uses Bluetooth Low Energy (BLE) mesh technology enabling convenient and flexible dimming. Casambi allows users to adjust light levels wirelessly, group luminaires and manage lighting schedules through Casambi App.

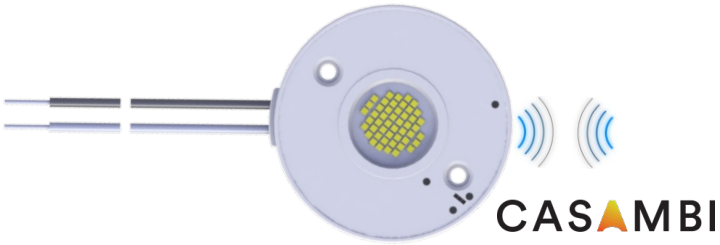

Casambi App

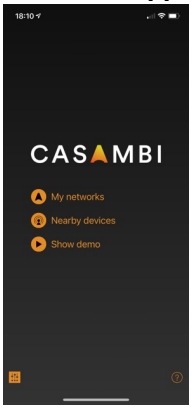

android iOS

GET IT ON Google Play Download on the App Store

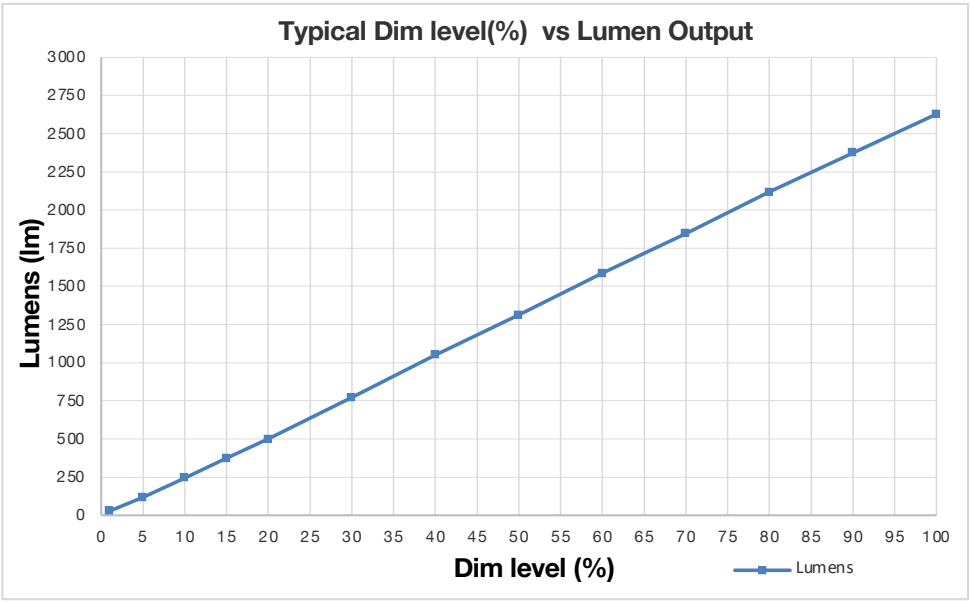

AC Input Tunable White LED Modules with Casambi Wireless Control

CASAMBI

6 - LABELING

The TWC-A5019W-25-9-CNS is used as an example to illustrate a typical label.

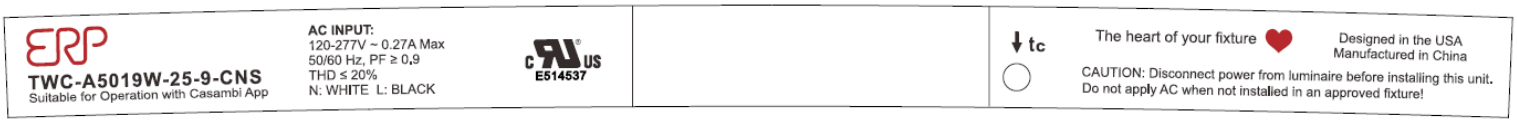

USA Headquarters
Tel: +1-805-517-1300
Fax: +1-805-517-1411
2625 Townsgate Road, Suite 106
Westlake Village, CA 91361, USA

CHINA Operations
Tel: +86-756-6266298
Fax: +86-756-6266299
No. 8 Pingdong Road 2
Zhuhai, Guangdong, China 519060

ERP Power, LLC (ERP) reserves the right to make changes without further notice to any products herein. ERP makes no warranty, representation or guarantee regarding the suitability of its products for any particular purpose, nor does ERP assume any liability arising out of the application or use of any product or circuit, and specifically disclaims any and all liability, including without limitation special, consequential or incidental damages. "Typical" parameters which may be provided in ERP data sheets and/or specifications can and do vary in different applications and actual performance may vary over time. All operating parameters, including "Typicals" must be validated for each customer application by customer's technical experts. ERP does not convey any license under its patent rights nor the rights of others. ERP products are not designed, intended, or authorized for use as components in systems intended for surgical implant into the body, or other applications intended to support or sustain life, or for any other application in which the failure of the ERP product could create a situation where personal injury or death may occur. Should Buyer purchase or use ERP products for any such unintended or unauthorized application, Buyer shall indemnify and hold ERP and its officers, employees, subsidiaries, affiliates, and distributors harmless against all claims, costs, damages, and expenses, and reasonable attorney fees arising out of, directly or indirectly, any claim of personal injury or death associated with such unintended or unauthorized use, even if such claim alleges that ERP was negligent regarding the design or manufacture of the part. ERP is an Equal Opportunity/Affirmative Action Employer. This literature is subject to all applicable copyright laws and is not for resale in any manner.

AC Input Tunable White LED Modules with Casambi Wireless Control

CASAMBI

Revision History

Date	Comments
30Sept2026	• Preliminary Release
09OCT2026	• Various corrections
12OCT2026	• Updated LES sizes
26OCT2026	• Updated the Typical Input Power and Efficacy specs in the front page.
12NOV2026	• Updated the TWC picture in the front page